PAINT BOOTHS

GENERAL PURPOSE

GFS GLOBAL FINISHING SOLUTIONS

INDUSTRY-LEADING PRODUCTS

With precise contamination control and premium angled ceiling "hip" lights, General Purpose Paint Booths from Global Finishing Solutions® (GFS) enable you to achieve high-quality paint finishes for your medium-sized equipment, utility vehicles and trucks.

Advanced spray booth technology and decades of experience make GFS the foremost authority in paint booths and finishing equipment. Thorough analysis of our customers' needs led us to create the GFS General Purpose Paint Booth line, designed to suit industrial and manufacturing customers whose products are too large for traditional automotive booths but too small for our Large Equipment Paint Booth line. Complete your projects more efficiently and enjoy a better overall paint finish in a bright, clean, ecologically friendly and economic paint environment.

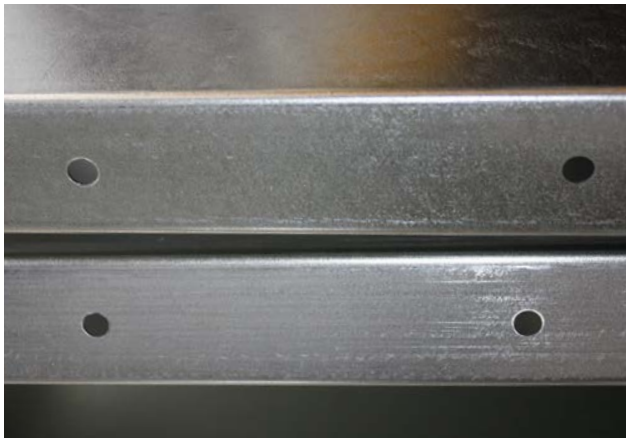

MATERIALS & CONSTRUCTION

General Purpose Booths are constructed from high-quality, 18-gauge, G90 galvanized sheet steel. Quality components including plate steel door hinges, friction-style latches and precision-punched vertical panels with sturdy nut-and-bolt assembly ensure longevity, safety and excellent structural integrity.

PRECISION DESIGNED & **ENGINEERED**

Not just a sheet metal box, General Purpose Paint Booths from Global Finishing Solutions are expertly designed and engineered for superior performance and longevity. Our experienced team of engineers and designers ensure all booths are structurally, mechanically and electronically sound. To this end, General Purpose Booths have achieved full ETL and ETL-C listing to meet all applicable industry standards and facilitate successful installation and inspections.

We guarantee quality by carefully selecting all booth components and manufacturing or assembling the majority of these components in-house. Made from heavy-duty G90 sheet steel, our General Purpose Booth wall panels are precision punched in our state-of-the-art facility for rigid nut-and-bolt construction. Regardless of your production needs, you can count on your GFS paint booth to deliver consistent results and last many years of industrial use.

FULLY **ETL LISTED**

GFS General Purpose Paint Booths are perfect for industrial manufacturers and businesses looking for a safe, clean, code-compliant environment for painting medium-sized equipment, utility vehicles and trucks.

Our General Purpose line is designed to meet all industry safety standards and comply with applicable International Fire Code (IFC) and NFPA codes for proper airflow and paint booth use. GFS General Purpose Paint Booths have achieved ETL and ETL-C listing for the booth enclosure and all standard booth models and options, validating performance and ensuring worry-free planning and installation.

The ETL or ETL-C mark on your booth is proof of compliance with North American safety standards, including UL, NFPA, OSHA and more. A UL or CUL listing verifies that Underwriters Laboratories has tested GFS' product and determined that it meets UL's stringent requirements. GFS works with these third-party agencies to ensure the safety of our General Purpose Paint Booths and components.

PRE-ENGINEERED SOLUTIONS

A combination of economy and efficiency, GFS pre-engineered General Purpose Booths are designed to meet your budget and quality requirements while providing exactly what you need. Based on extensive market research and data analysis, GFS has focused our pre-engineered offering to meet the majority of our customers' needs while still providing options to ensure flexibility.

Pre-engineered General Purpose Booths are available in a select number of sizes and are comprised of GFS' most tried-and-true features. By eliminating the need to custom engineer every booth, we can provide you with the flexibility and quality you need, fast.

CUSTOM ENGINEERED SOLUTIONS

What sets GFS apart from the rest is our ability to deliver precisely engineered custom products. As the world's largest paint booth manufacturer, we have the resources and expertise to design technologically advanced paint booths to meet your specific feature and size requirements.

Custom engineered solutions provide the same exceptional quality and performance you expect from GFS in a truly one-of-a-kind booth for painting your medium-sized equipment, utility vehicles and other products.

CROSSDRAFT BOOTHS

The most cost-effective airflow style, crossdraft General Purpose Booths offer reliable performance at an affordable price point. Since there is no pit to dig, crossdraft booths are also easier to integrate into existing facilities. Air flows horizontally through a crossdraft booth, starting at the front of the booth and flowing over the product or part and into a filter bank in the booth rear.

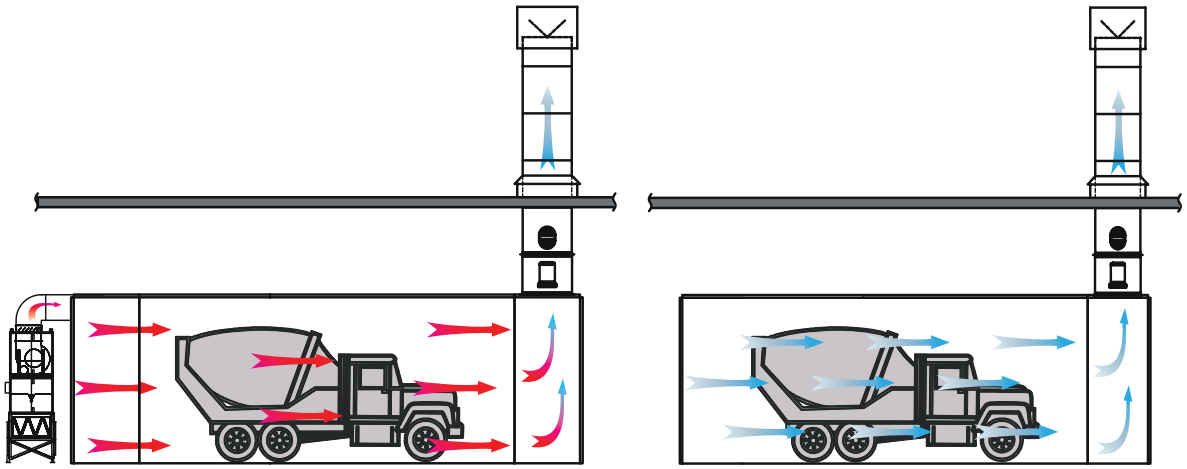

Pressurized and Non-Pressurized Models Available

GFS
GLOBAL
FINISHING
SOLUTIONS
GENERAL PURPOSE BOOTH
globalfinishing.com | 800.848.8738

GFS
GLOBAL
FINISHING
SOLUTIONS
GENERAL PURPOSE BOOTH
globalfinishing.com | 800.848.8738

GFS
GLOBAL
FINISHING
SOLUTIONS
GENERAL PURPOSE BOOTH
globalfinishing.com | 800.848.8738

SIDE DOWNDRAFT BOOTH

Side downdraft booths are an economical solution for shops that aren't able to install a pit. Air comes into the booth through a full-length, filtered ceiling plenum, and flows downward over the product. When air reaches the floor, it is pulled into floor-level filtered exhaust plenums on both sides of the booth.

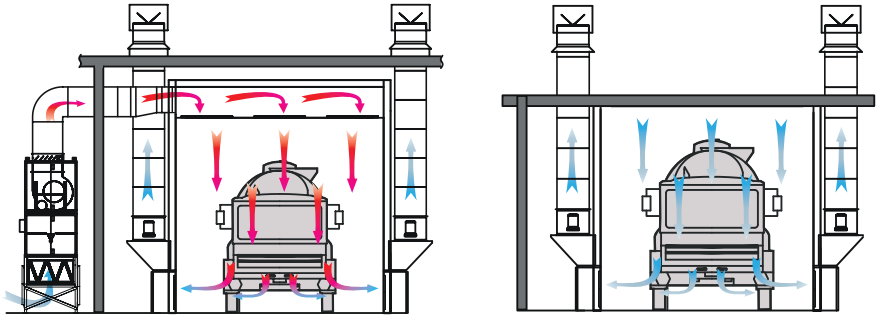

Pressurized and Non-Pressurized Models Available

SEMI-DOWNDRAFT BOOTH

The semi-downdraft booth is a hybrid, combining features of both crossdraft and downdraft booths. Air is introduced to the booth through the ceiling in the first 25-30 percent of the booth. It's then pulled across the working chamber, over the vehicle and into the filtered exhaust chamber at the booth rear.

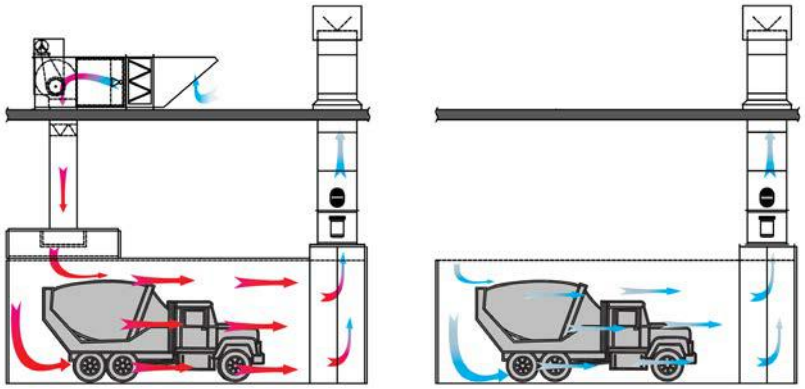

Pressurized and Non-Pressurized Models Available

GFS
GLOBAL
FINISHING
SOLUTIONS
GENERAL PURPOSE BOOTH
globalfinishing.com | 800.848.8738

GFS
GLOBAL
FINISHING
SOLUTIONS
GENERAL PURPOSE BOOTH
globalfinishing.com | 800.848.8738

DOWNDRAFT BOOTH

Generally accepted as the best airflow style, downdraft booths do an excellent job of controlling overspray and contamination. Air enters the booth through a full-length, filtered ceiling plenum. From there, air flows vertically over the product and into the filtered exhaust pit in the floor.

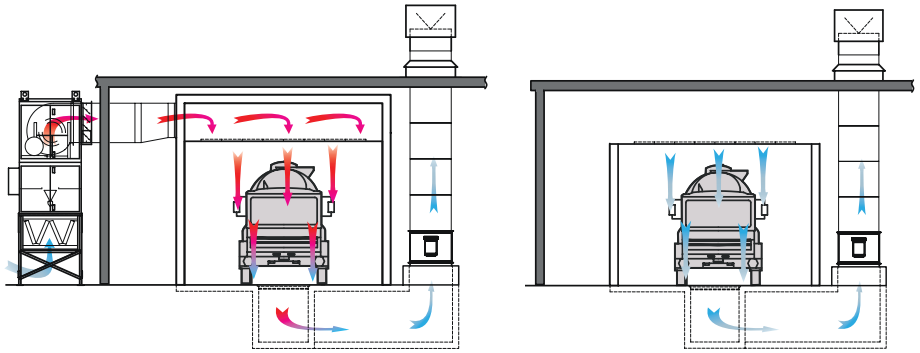

Pressurized and Non-Pressurized Models Available

AIR MAKE-UP UNIT

GFS' direct gas-fired air make-up units (AMU) provide an economical source of replacement air. By continually replacing contaminated booth air with fresh, heated outdoor air, AMUs maintain a constant air temperature regardless of the air temperature outside your building. This allows for balanced building pressure and proper comfort levels.

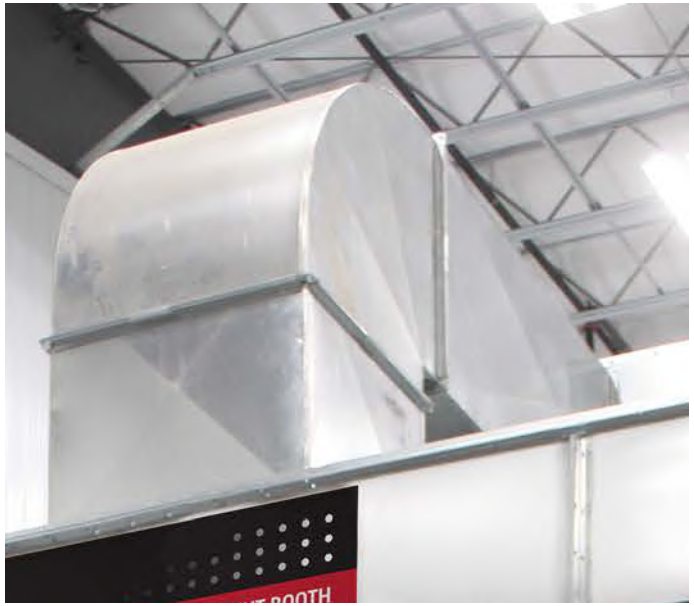

AIR MAKE-UP
UNIT OPTIONS

Many AMU options and arrangements are available to fit your needs and accommodate the layout of your paint booth and facility. Regardless of the configuration, all GFS AMUs are constructed from sturdy, high-quality materials. Our most common configurations involve mounting the AMU to the booth or on the building roof. Depending on the configuration, you can also choose from horizontal or vertical mount and indoor or outdoor air discharge. Additional AMU options include cooling or humidity controls, intake and exhaust dampers, recirculating airflow and curing systems.

CONTROL PANELS

All GFS control panels are UL and CUL listed and make it easy to manage your booth's safety features and environment. Two primary control panels are available with the General Purpose Paint Booth line, although highly customized booths may require a custom control panel. For non-pressurized booths, the electromechanical control panel is a cost-effective solution used to control booth exhaust, safety interlocks and lights. The Velocity™ control panel comes complete with an Allen-Bradley touch-screen interface and supports spray, flash and cure modes along with many programmable alarms, an auto-balancing system (on pressurized booths) and automatic safety checks.

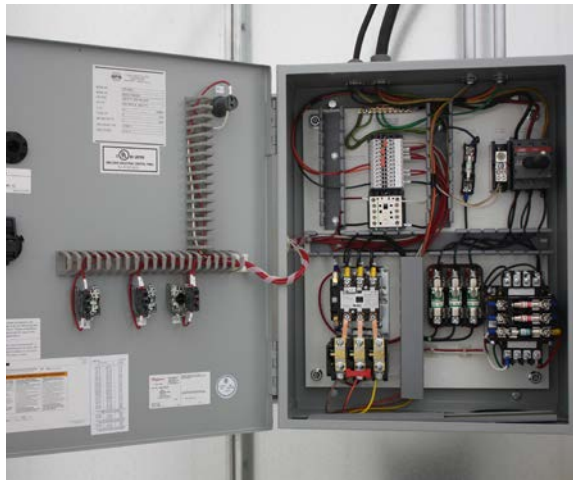

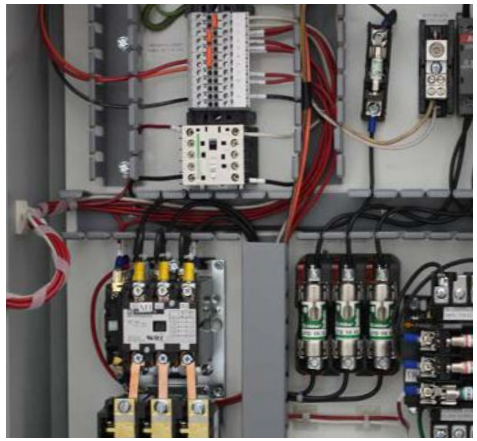

BOOTH **LIGHTING**

Designed for optimal brightness and color matching, General Purpose Booths feature angled ceiling lighting that is strategically placed for precise lighting and minimal shadows. Our light fixtures are manufactured in our factory for consistent quality, and are ETL and ETL-C listed to remain in compliance with industry standards. Four-tube fluorescent fixtures with T8 ballasts come standard on all General Purpose Booths. However, many light and fixture options are available to customize booth lighting to meet your needs, including LED bulbs for added brightness and energy efficiency, six-tube fluorescent fixtures and light reflectors for increased luminosity.

DOORS & **WINDOWS**

GFS doors and windows are designed with durability and flexibility in mind. Each pre-engineered General Purpose Booth includes a swing-type product door and one personnel door. Depending on the layout of your booth and paint line, optional pre-engineered doors and configurations – such as roll-up, bi-fold or drive-thru – may be right for you.

Observation windows come standard in all personnel doors, but can also be added to booth walls and certain product doors to monitor robotics, painters or booth modes.

BOOTH **FILTRATION**

All GFS booths are engineered for excellent airflow and filtration. Intake filters ensure that dust, dirt and particles are removed from the air entering the booth, protecting the paint finish from contaminants and reducing rework. As air leaves the booth, it passes through exhaust filtration to remove overspray and particles before the air enters the outside environment. GFS is proud to meet or exceed all applicable EPA standards and help protect the air quality in the communities where our customers operate.

GFS Wave™

CUSTOM OPTIONS

One of GFS' greatest strengths is our ability to provide our customers with highly specialized products. Custom options such as added layers of filtration, crane slots, cat walks and conveyors are precisely engineered and designed to fit cohesively into your General Purpose Paint Booth. Regardless of your product finishing specialty, we seek to help you meet and exceed expectations.

HAZARDOUS MATERIAL STORAGE BUILDINGS **& MIX ROOMS**

Some of our most popular add-ons, Hazardous Material Storage Buildings – sometimes called "Paint Kitchens" – and Mix Rooms provide a safe, ventilated, dust-free environment for painters to mix and store paint and other hazardous materials. Hazardous Material Storage Buildings are code compliant and are required for businesses that need to store large amounts of chemical products to minimize the risk of explosions and contain spills.

RECOGNIZED **QUALITY**

When you invest in capital equipment, you want a reliable, proven product from a company you can count on. With roots in the finishing industry dating back more than 130 years, Global Finishing Solutions is experienced at designing and building state-of-the-art paint booths and finishing equipment that exceed our customers' expectations. Businesses of all sizes and industries continue to come back to GFS for consistent, quality equipment every time.

SERVICE & SUPPORT
YOU CAN COUNT ON

We stand by our products and believe that excellent service shouldn't end at the sale. You can rely on Global Finishing Solutions and our experienced distribution network for lifelong support and service of your paint booth. GFS' unmatched Technical Services department and a local distributor are available to assist you with any emergency repairs or maintenance issues to ensure your booth is always running in peak condition. Preventative maintenance plans are also available to extend the life of your equipment.

globalfinishing.com | 800-848-8738

GLOBAL
FINISHING
SOLUTIONS

©2017 Global Finishing Solutions. All Rights Reserved.

GN-PURPOSE 06-2017